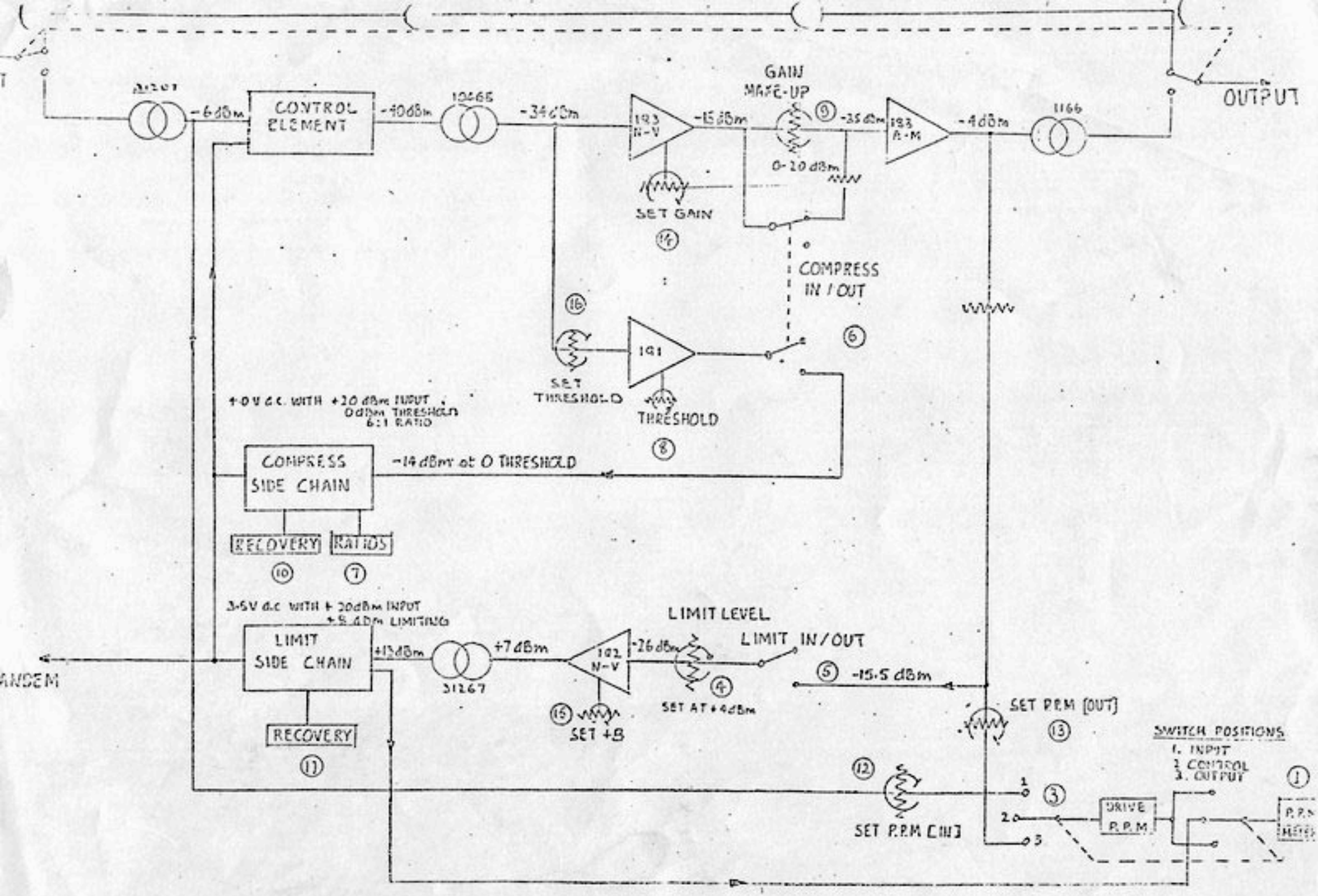

LIMITER COMPRESSOR 2254A