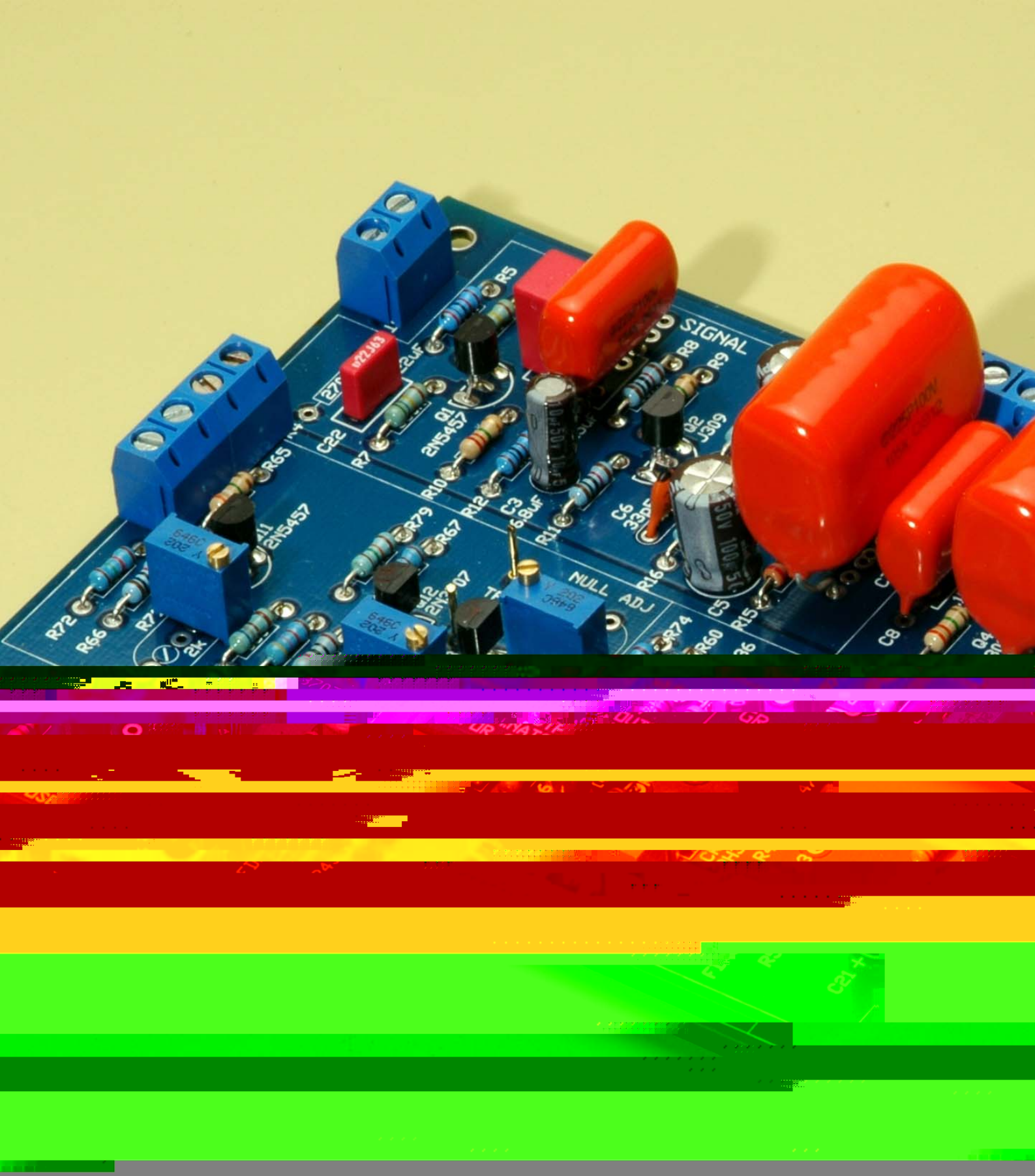
SIGNAL
NULL ADJ
R5
R8
R9
Q1
2N5457
Q2
J309
C22
R7
R65
R10
R12
C3
6.8uF
R11
C6
33pF
R79
R67
R16
C5
R15
R72
R66
R74
R60
C8
Q4
2k

V1.0 09.09.08
1126 REV A

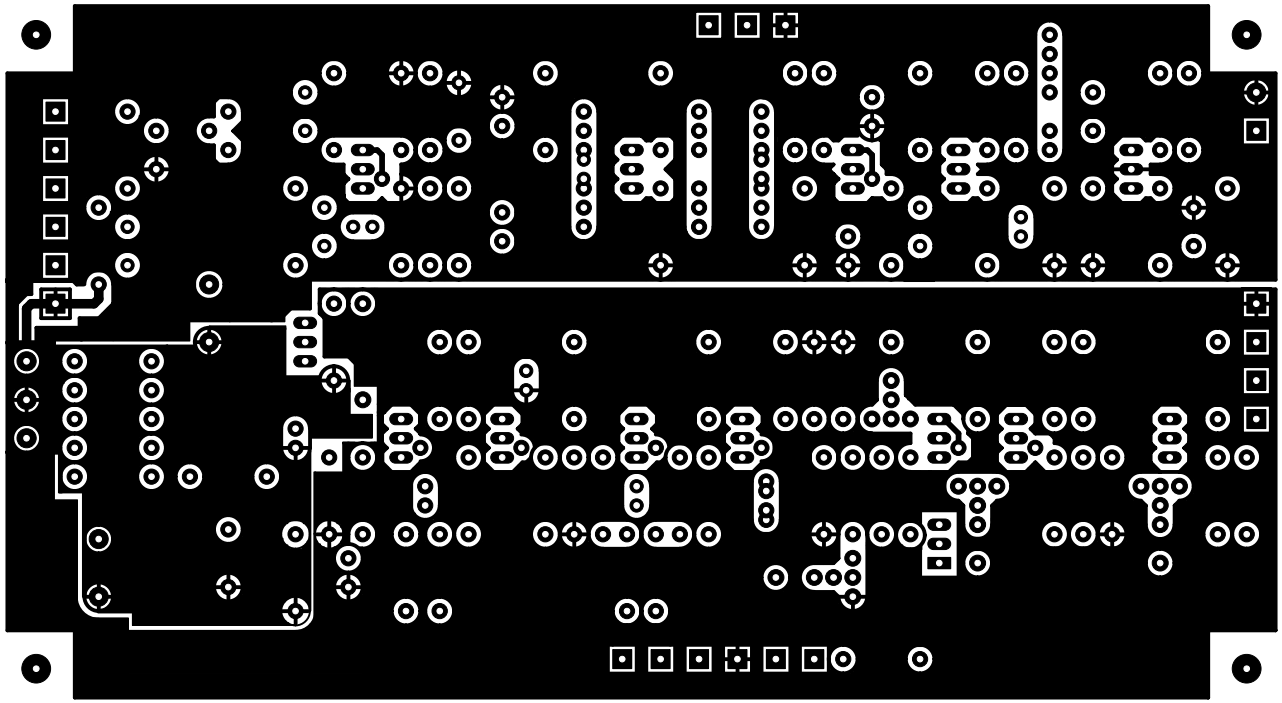

BILL OF MATERIALS FOR MNATS 1176 REV A VERSION 1.0 BOARD

MAIN BOARD

QUANTITY	VALUE	DESCRIPTION	DESIGNATION	NOTES
3	0.15uF	CAPACITOR	C1 C2 C8	
3	1uF	CAPACITOR	C10 C17 C7	
1	47p	CAPACITOR	C11	
4	100uF	CAPACITOR	C12 C21 C4 C5	
1	.033uF	CAPACITOR	C14	
1	.0047uF	CAPACITOR	C15	
1	38p	CAPACITOR	C16	
2	47uF	CAPACITOR	C18 C9	
5	6.8uF	CAPACITOR	C19 C20 C23 C3 Cx6	Replace Cx6 with link for 1176
1	.22uF	CAPACITOR	C22	
1	2200uF/35V	CAPACITOR	C24	
2	2200uF/50V	CAPACITOR	C25 C26	
1	33pF	CAPACITOR	C6	
1	1N914	DIODE	CR1	
2	FDH333	DIODE LOW LEAKAGE	CR2 CR3	
1	1N4740A	DIODE ZENER	CR6	
4	1N4004	RECTIFIER	CR10 CR7 CR8 CR9	
1	2.2M	RESISTOR	R10	
4	10k	RESISTOR	R11 R35 R66 R8	
4	1k	RESISTOR	R12 R74 R81 R82	
6	47k	RESISTOR	R13 R16 R38 R46 R52 R53	
1	22k	RESISTOR	R14	
1	20k	RESISTOR	R15	
4	8.2k	RESISTOR	R17 R34 R76 R94	
1	15M	RESISTOR	R24	
1	3.3M	RESISTOR	R25	
1	33k	RESISTOR	R26	
1	12k	RESISTOR	R27	
2	560	RESISTOR	R28 R33	
1	1.2M	RESISTOR	R29	
1	120k	RESISTOR	R30	
1	39	RESISTOR	R32	
1	1M	RESISTOR	R36	
1	470k	RESISTOR	R37	
3	4.7k	RESISTOR	R39 R51 R70	
2	270	RESISTOR	R4 R41	
2	2.4k	RESISTOR	R40 R49	
1	182k	RESISTOR	R42	
1	38.3k	RESISTOR	R43	
1	44.2k	RESISTOR	R47	
1	7.68k	RESISTOR	R48	
1	27k	RESISTOR	R5	
1	180	RESISTOR	R50	
2	560k	RESISTOR	R6 R7	
2	3.9k	RESISTOR	R60 R67	
1	2.2k	RESISTOR	R64	
2	3.9M	RESISTOR	R65 R9	
2	820	RESISTOR	R68 R69	
1	1.5k	RESISTOR	R72	
1	680	RESISTOR	R73	
1	15k	RESISTOR	R79	
1	1.1k 1Watt	RESISTOR	R87	
1	220	RESISTOR	R89	
1	820k	RESISTOR	Rx14	Not used for 1176
2	2N5457	TRANSISTOR FET	Q1 Q11	
8	2N3707 OR 2N5088	TRANSISTOR	Q10 Q12 Q13 Q3 Q5 Q7 Q8 Q9	Q7-Q10 HFE 250 OR ABOVE Q12,Q13 MATCH HFE USE ALTERNATE BASE PAD FOR 2N5088
2	J309	TRANSISTOR FET	Q2 Q4	
1	2N3053	TRANSISTOR MEDIUM POWER	Q6	
1	5k	TRIMMER POTENTIOMETER	R44	MULTI TURN TYPE
3	2k	TRIMMER POTENTIOMETER	R59 R71 R75	PREFERRED
1	7824	VOLTAGE REGULATOR	VR1	

ROTARY SWITCH BOARDS

QUANTITY	VALUE	DESCRIPTION	DESIGNATION	NOTES
1	4 POLE	LORLIN ROTARY SWITCH	S2	
2	2 POLE	LORLIN ROTARY SWITCH	S4	
1	22nF	CAPACITOR	C27	
1	3.6k	RESISTOR	R16	
1	130k	RESISTOR	R19	
3	56k	RESISTOR	R20 R21 R22	
1	10M	RESISTOR	R45	
2	470	RESISTOR	R54 R61	
1	270k	RESISTOR	R57	
1	180	RESISTOR	R58	
1	560	RESISTOR	R62	
1	1.5k	RESISTOR	R63	

ADDITIONAL COMPONENTS

1	600 OHM	"T" ATTENUATOR	
1	UTC O-12 OR ALTRAN C-3837-1	INPUT TRANSFORMER	THESE ITEMS AVAILABLE FROM http://hairballaudio.com/shop/
1	CM96731 OR EA-5002	OUTPUT TRANSFORMER	
1	50V CT	POWER TRANSFORMER	SELECT FOR LOCAL MAINS VOLTAGE

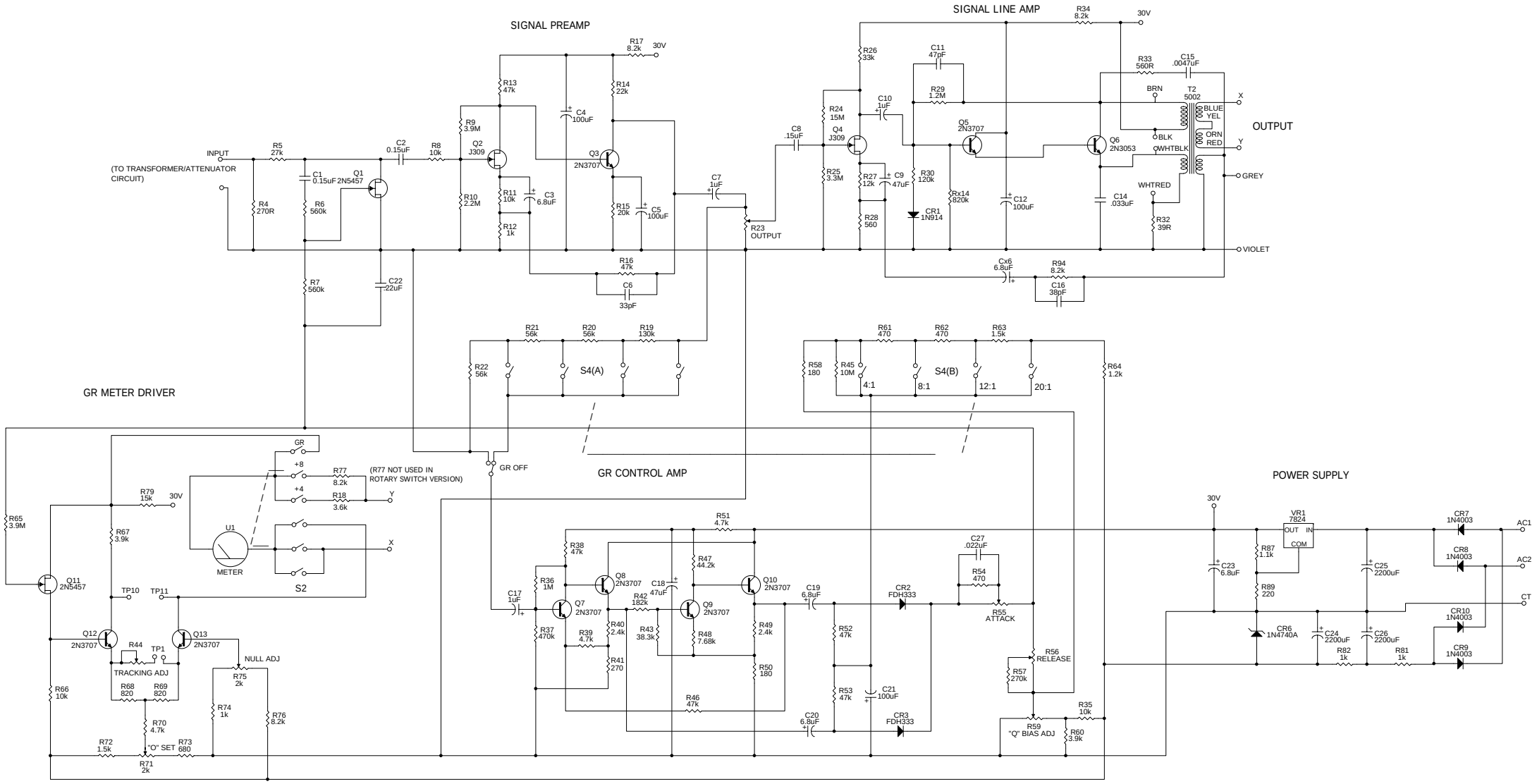
SIGNAL PREAMP
SIGNAL LINE AMP
INPUT
(TO TRANSFORMER/ATTENUATOR CIRCUIT)
OUTPUT
GR METER DRIVER
GR CONTROL AMP
POWER SUPPLY
S4(A)
S4(B)
4:1
8:1
12:1
20:1
GR OFF
(R77 NOT USED IN ROTARY SWITCH VERSION)
METER
S2
TRACKING ADJ
NULL ADJ
"O" SET
ATTACK
RELEASE
"Q" BIAS ADJ
30V
BLUE
YEL
ORN
RED
BRN
BLK
WHTBLK
WHTRED
GREY
VIOLET